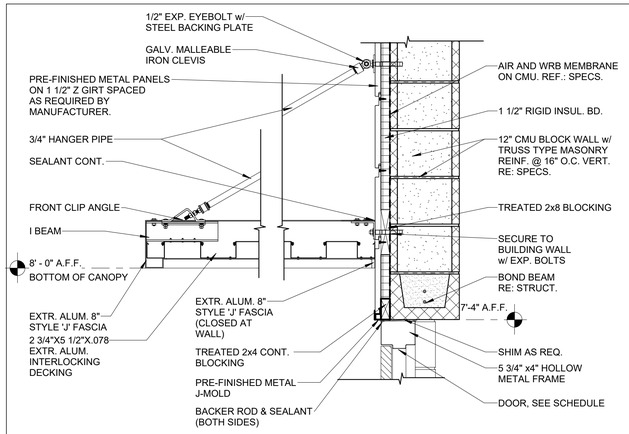

7 DOOR CANOPY w/ METAL PANEL
1" = 1'-0" | RE:1/A1.03

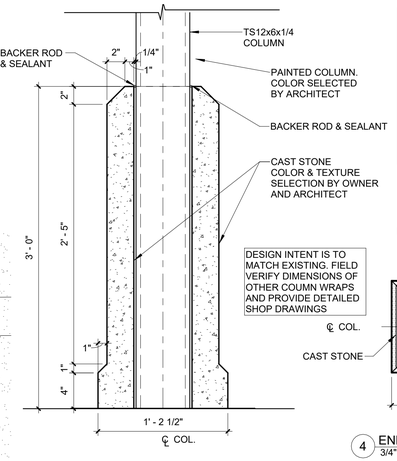

3 ENLARGED DETAIL
1 1/2" = 1'-0" | RE:4/SP1.01

DESIGN INTENT IS TO MATCH EXISTING. FIELD VERIFY DIMENSIONS OF OTHER COUMN WRAPS AND PROVIDE DETAILED SHOP DRAWINGS

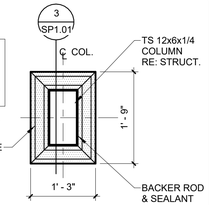

4 ENLARGED DETAIL
3/4" = 1'-0" | RE:1/A1.01

LEGEND

SOD

IRRIGATION ZONES

GENERAL NOTES

1. ALL DISTURBED AREAS OUTSIDE OF SOD SHOWN SHALL BE HYDROSEEDED.
2. GENERAL CONTRACTOR SHALL PROVIDE TEMPORARY CONSTRUCTION FENCING TO PROTECT THE CONSTRUCTION AREA. 6'-0" CHAIN LINK.
3. COORDINATE JOB SHACK LOCATION WITH OWNER AND THE ARCHITECT DURING CONSTRUCTION.

IRRIGATION NOTES

1. EXISTING IRRIGATION CONTROLLER IS HUNTER PRO-C.
2. TWO UNUSED ZONES ON THE EXISTING CONTROLLER SHALL BE UTILIZED FOR THIS PROJECT.
3. EXISTING CONTROLLER AND BACKFLOW PREVENTER SHALL BE RELOCATED AS SHOWN ON THE PLANS (REF. CIVIL).
4. LARGE TURF AREAS SHALL BE IRRIGATED USING HUNTER PGP ROTOR POP-UP HEADS.
5. SMALL TURF AREAS SHALL BE IRRIGATED USING HUNTER PRO-6 6" POP-UP MIST HEADS.
6. MAIN LINE PIPING SHALL BE 2".
7. ZONE LATERALS SHALL BE 1-½".
8. ALL PIPING SHALL BE CLASS 200 PVC.
9. LANDSCAPE CONTRACTOR MUST BE LICENSED FOR PROJECTS OF \$50,000 OR MORE.
10. IRRIGATION CONTRACTOR MUST BE LICENSED FOR PROJECTS OF \$50,000 OR MORE.
11. SPRINKLER COVERAGE SHALL BE PROVIDED TO ALL TURF AREAS AS SHOWN ON THE PLANS.
12. CONTRACTOR SHALL FIELD VERIFY ALL CONNECTIONS AND CONDITIONS OF EXISTING IRRIGATION SYSTEM PRIOR TO START OF WORK.
13. EXISTING IRRIGATION ZONES OUTSIDE THE LIMITS OF WORK SHALL REMAIN IN PLACE AND SHALL NOT BE DISTURBED OR DAMAGED.
14. ANY EXISTING IRRIGATION SYSTEM COMPONENTS AFFECTED BY THIS PROJECT SHALL BE REPAIRED AND/OR RECONNECTED TO MAINTAIN FULL SYSTEM OPERATION.

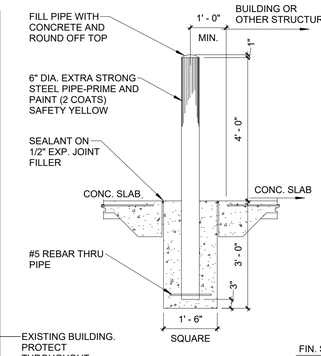

6 PIPE BOLLARD
1/2" = 1'-0" | RE:1/SP1.01

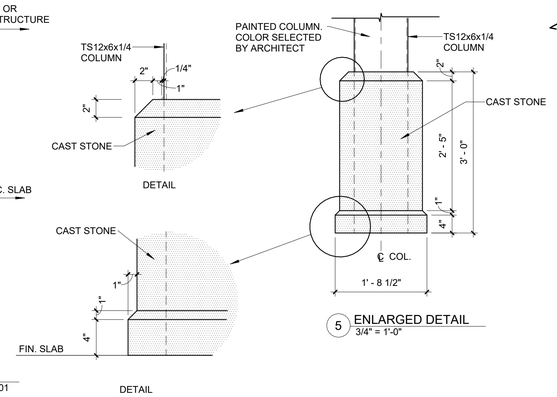

5 ENLARGED DETAIL
3/4" = 1'-0"

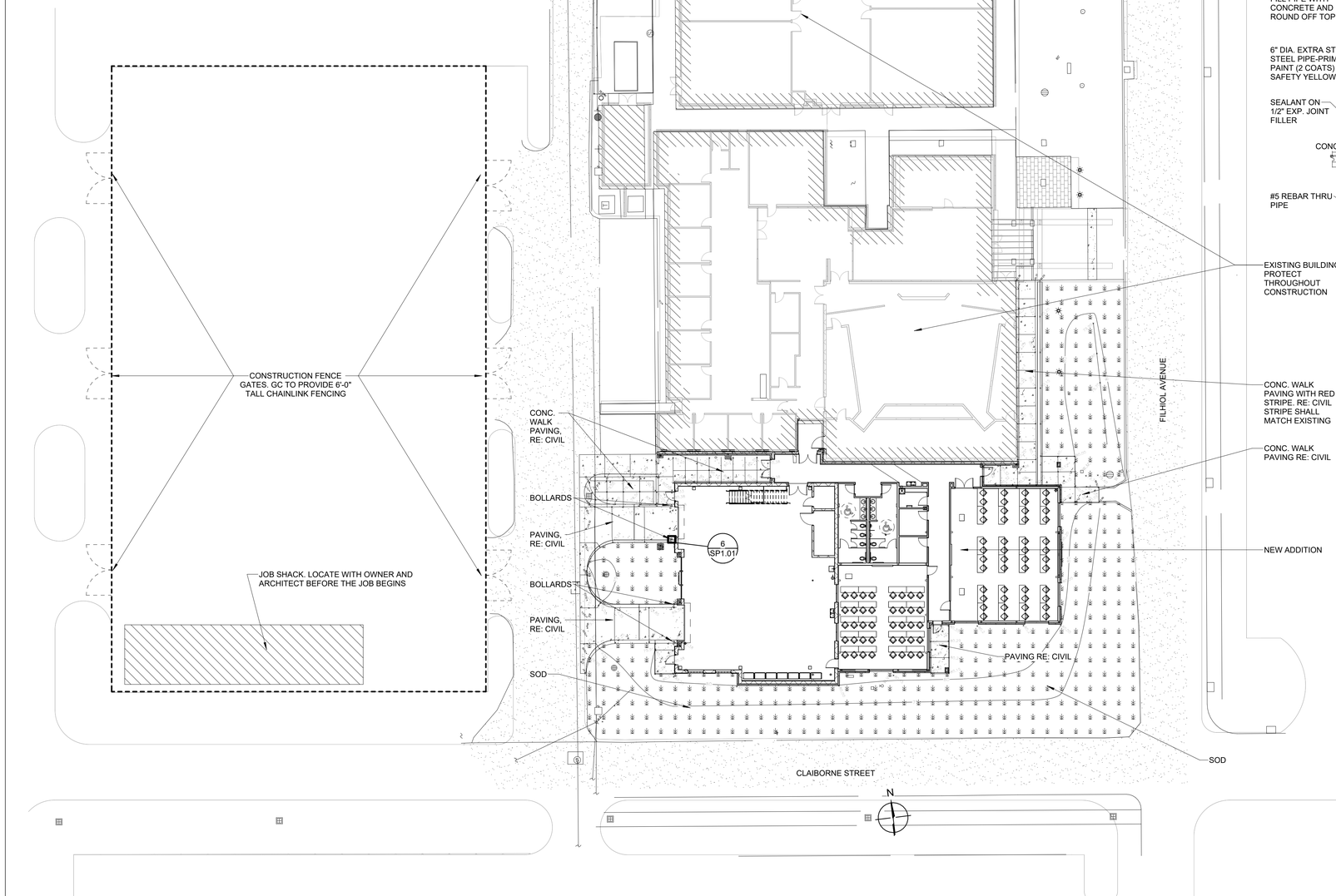

1 SITE PLAN
1" = 20'-0" | RE:2/A4.02

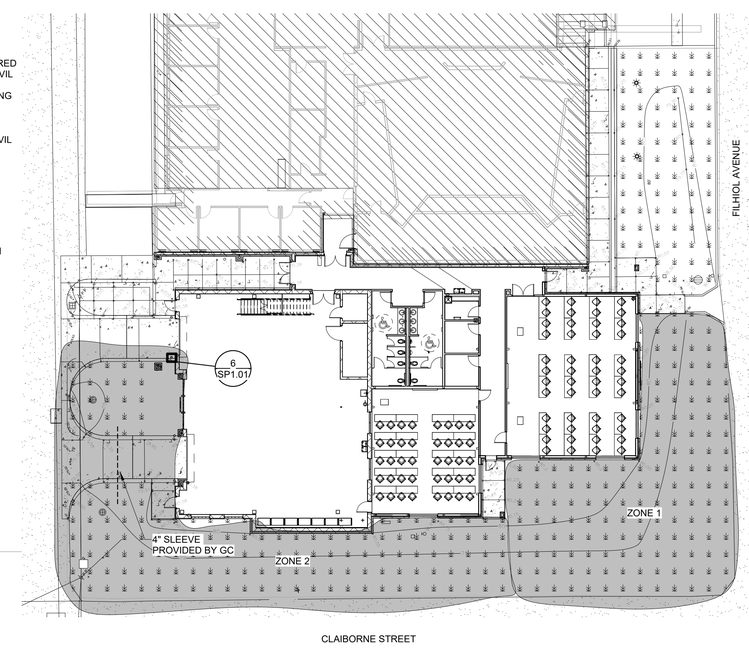

2 IRRIGATION PLAN
1" = 20'-0" | RE:2/A4.02

TBA STUDIO
ARCHITECTURE
103 Cypress Street
West Monroe, LA 71291
Tel. 318.340.1550
Fax. 318.998.1315
www.tbastudio.com

TBA

TIMOTHY M. BRANDON LIC.#5772 STATE OF LOUISIANA REGISTERED ARCHITECT

SCHOOL OF CONSTRUCTION PRACTICE LAB BUILDING, UNIVERSITY OF LOUISIANA MONROE

507 Filhiol Ave, Monroe, LA 71203

DRAWING REVISIONS

No.	Description	Date

DRAWN BY: KB, MU

CHECKED BY: CW

SHEET

SP1.01

Date: NOV 2025

Project No.: 24-0059

File Name:

DESCRIPTION:

SITE PLAN

COPYRIGHT THESE DRAWINGS ARE THE SOLE OWNERSHIP OF TBA STUDIO